T.M. Amarillo®
Gear

Post Office Box 1789
Amarillo, Texas 79105
2401 Sundown Lane (79118)
Ph. (806) 622-1273
Fax (806) 622-3258

# GENERATION II®

## FOR COOLING TOWER APPLICATIONS

## OPERATIONS AND MAINTENANCE INSTRUCTIONS

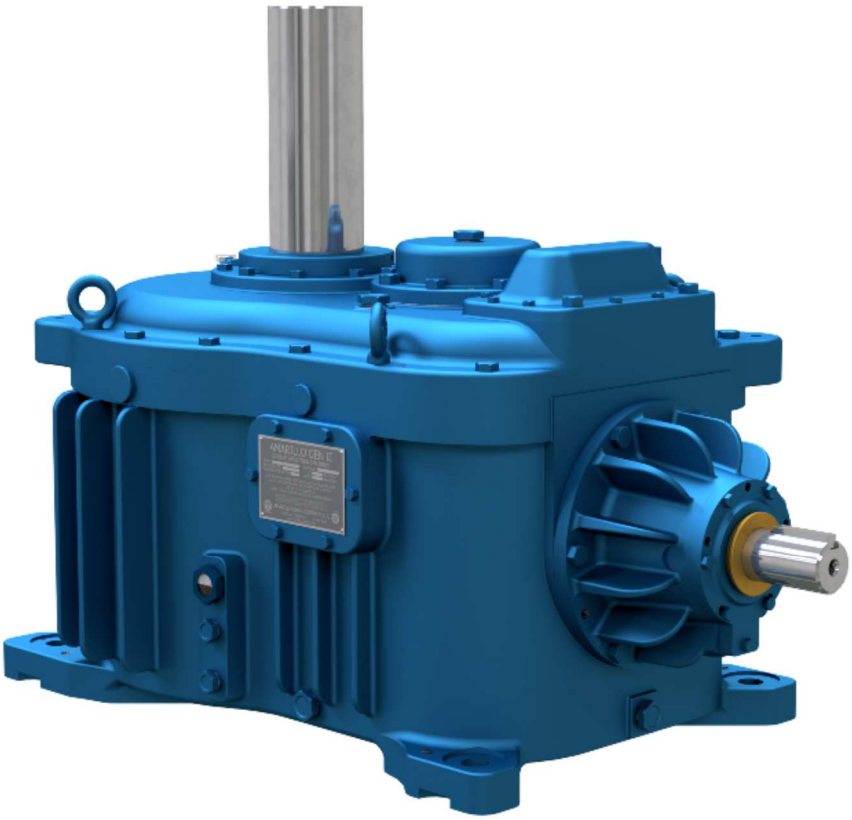

Each Amarillo® Fan Drive is the result of careful design and manufacturing techniques. As with any precision machine component, proper installation, maintenance, and operating procedures are imperative for long life and trouble-free service. Do not install or operate until you have read and understand this manual; failure to do

# TABLE OF CONTENTS


1. **SAFETY INFORMATION** **2**
   - 1.1 SYMBOLS AND SIGNS USED 2
   - 1.2 GENERAL SAFETY INFORMATION 2
2. **RECEIVING INSPECTION** **3**
   - 2.1 INSPECT NAME PLATE 3
3. **STORAGE INSTRUCTIONS** **3**
   - 3.1 ACCEPTABLE STORAGE 3
   - 3.2 UNACCEPTABLE STORAGE 3
   - 3.3 LONG TERM STORAGE 3
4. **INSTALLATION** **3**
   - 4.1 OIL FILL 3
   - 4.2 CLEAN RUST PREVENTATIVE 4
   - 4.3 INSTALL AT MOUNTING LOCATION 4
   - 4.4 INSTALL FAN 4
   - 4.5 LEVELING FAN DRIVE 4
   - 4.6 TORQUE BOLTS 4
   - 4.7 CHECK MOTOR ROTATION 4
   - 4.8 INSTALL DRIVE SHAFT 4
   - 4.9 SERVICE PIPING 4
   - 4.10 ELECTRICAL CONNECTIONS 4
   - 4.11 BREATHER 5
5. **OPERATION** 5
   - 5.1 REVERSING OPERATION 5
   - 5.2 NON-REVERSE (BACK-STOP) OPTION 5
   - 5.3 EXTREME COLD OPERATION 5
6. **MOTOR SELECTION PRECAUTIONS** **5**
   - 6.1 TWO SPEED 5
   - 6.2 VARIABLE SPEED 5
7. **SCHEDULED MAINTENANCE** **6**
   - 7.1 DAILY 6
   - 7.2 WEEKLY 6
   - 7.3 EVERY SIX MONTHS OR 2500 HOURS 6
   - 7.4 EXTENDED OIL CHANGE INTERVALS 6
8. **INACTIVE FAN DRIVES** **7**
9. **LUBRICATION** **7**
   - 9.1 MINERAL OILS 7
   - 9.2 SYNTHETIC OILS/OIL HEATERS 7
10. **WARRANTY** **7**
11. **EXTERNAL PART LOCATIONS** **8**
12. **PARTS LIST** **9**


The following instructions are offered to cover most conditions. Our engineers will be pleased to assist when unusual conditions require special procedures. A copy of this document is to be sent and maintained by the end user of the Generation II Fan drive.

## 1. SAFETY INFORMATION

### 1.1 SYMBOLS AND SIGNS USED

**DANGER**

**WARNING**

Indicates a hazardous situation that, if not avoided, will result in death or serious injury.

Indicates a hazardous situation that, if not avoided, could result in death or serious injury.

**CAUTION**

Indicates a hazardous situation that, if not avoided, could result in minor or moderate injury and may result in damage to fan drive.

### 1.2 GENERAL SAFETY INFORMATION

It is the sole responsibility of the owner/operator to carefully read this manual and to observe and ensure the continued practice of all safety statements including dangers, warnings, and cautions. Failing to do so may result in death, serious injury, or fan drive failure.

**Maintain a copy of this manual for the**

**⚠WARNING**

**This product contains a chemical known to the State of California to cause cancer.**

**This product contains a chemical known to the State of California to cause birth defects or other reproductive harm.**

**⚠WARNING**

The fan drive should be operated only within its design and performance specifications; **injury or damage to the system may occur if operated outside of these specifications.**

Keep hands and all foreign objects from all internal and external moving parts of the fan drive; **failing to do so may cause injury or damage to the system.**

**⚠ DANGER**

Transport, installation, plumbing, operation, maintenance, and inspections should be handled by properly trained technicians; **failing to do so will shorten product life, cause injury, or damage to the fan drive.**

Never stand directly under any suspended equipment by a crane or other lifting mechanism; **personal injury or death may result.**

Do not install or operate any equipment or machinery provided by Amarillo® Gear Co. until this manual has been fully read and understood; **failing to do so will void war-**

**⚠ CAUTION**

Failing to maintain the fan drive as described in this manual will result in voiding of warranty and fan drive failure.

Do not attempt to modify or disassemble the fan drive in any way; **doing so will void warranty, may cause permanent damage to fan drive, or injury.**

# 2. RECEIVING INSPECTION

Upon receiving a crated fan drive, a crate panel should be carefully removed to verify there is no evi-

**⚠ WARNING**

Contents of crate may have shifted during transport. **Open cautiously to avoid any injury.**

Verify that the fan drive received is in fact the one ordered. **Installation of the incorrect drive may result in injury, incorrect operation, or damage to the system.**

dence of shipping damage.

## 2.1 INSPECT NAME PLATE

Ensure model number of received fan drive matches model number ordered.

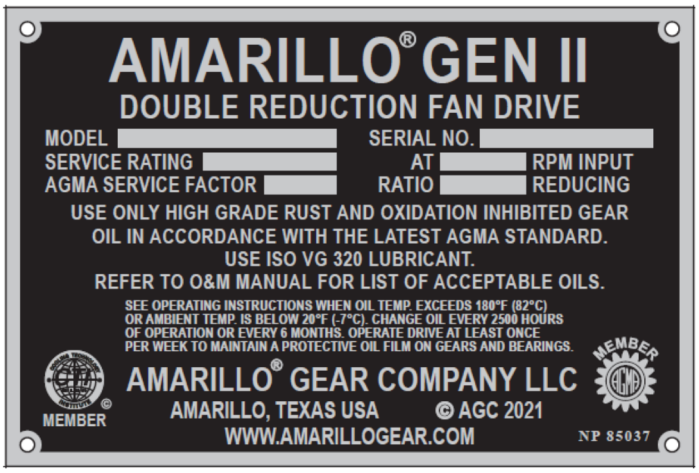


Ensure reducing ratio on received fan drive matches ordered ratio.

***ATTENTION: To better assist with any inquiries to Amarillo Gear Co., please provide model number, serial number, and ratio.***

# 3. STORAGE INSTUCTIONS

## 3.1 ACCEPTABLE STORAGE

Dry, indoor storage is required. Fan drive is typically shipped upright on skid with first fill of mineral oil as standard product. Synthetic oil is also available upon customer request. Operator must follow initial oil change requirements in Section 7, Page 6.

## 3.2 UNACCEPTABLE STORAGE

Wrapping crates, such as with a tarp, is not an acceptable means of covering and will not fully protect the fan drive. Tarping the drive may result in damage.

## 3.3 LONG TERM STORAGE

Contact Amarillo® Gear for detailed storage instructions for periods greater than 12 months or in adverse ambient storage conditions.

**⚠ CAUTION**

Failing to follow storage maintenance guidelines may result in fan drive damage. Amarillo® Gear is not responsible for drives damaged due to unacceptable storage.

**⚠ WARNING**

Do not place any flammable objects near the fan drive or any objects that impede ventilation; doing so may result in fire or overheating of equipment.

**Avoid pinch point areas when installing fan drive; failing to do this may result in serious injury or death.**

**⚠ CAUTION**

Failing to fill the fan drive with the proper amount and type of lubricant prior to operation will cause gear drive damage.

Do not attempt to modify or disassemble the fan drive; **doing so will void warranty, may cause permanent damage to fan drive, or injury.**

Do not overfill fan drive; doing so may have adverse effects on operation and may

# 4. INSTALLATION

Generation II fan drives are shipped with the fan shaft thrust bearing properly set and shipped on skid with first fill of mineral oil as standard product.

## 4.1 OIL FILL

The correct oil level is to the middle of the oil level sight glass. Install the correct type of oil in fan drive as directed in this O&M prior to operation (See Section 9,

Flushing of any residual factory test oil is not required prior to filling when using products listed in Section 9, Table 2-3. After installation, follow the oil change interval specification provided in the scheduled maintenance (Section 7, Page 6) of this document. Contact Amarillo® Gear for recommendations on oils not listed in this document.

An initial oil change is required after 500 hours of runtime, or four weeks, whichever is sooner.

### 4.2 CLEAN RUST PREVENTATIVE

Remove rust preventive from shaft extensions using a cloth soaked in mineral spirits, alkaline cleaner, or aliphatic solvent.

### 4.3 INSTALL AT MOUNTING LOCATION

Once fan drive is positioned at desired mounting location, continue to 4.4. Do not torque bolts for mounting at this time before checking for "soft foot."

**⚠ DANGER**

Never hoist a fan drive that exceeds the rating of the crane or other mechanism being used; **damage to the fan drive and/or lifting device, injury, or death may occur.**

Never stand directly under any suspended equipment by a crane or other lifting mechanism; **personal injury or death may result.**

### 4.4 INSTALL FAN

Install fan per fan manufacturer's specifications and recommendations.

**⚠ DANGER**

**Failing to follow fan manufacturer's specifications and recommendation when installing fan may result in fan drive damage, tower damage, or death.**

### 4.5 LEVELING FAN DRIVE

Level the fan drive and securely fasten it to its support. Shimming may be required to ensure the fan drive is level with no instance of "soft foot" that may distort the fan drive case which will cause misalignment in gearing and bearings. This can be verified after all hold down bolting has been properly torqued (See Table 1, Section 4.6) by releasing the torque one at a time and measuring with a dial indicator to see if there is any deflection.

If deflection exceeds 0.002 inch (0.05 mm), use proper shim thicknesses to eliminate the deflection. Once complete with the first hold down bolt, re-torque and move to the next hold down bolt. Proceed until all hold down bolting has been properly verified to have deflection less than 0.002 inch (0.05 mm).

Check fan tip clearance per manufacturer's specifications before torquing bolts or operating fan drive.

| MODEL | BOLT SIZE (Inch) | lb·ft |
|---|---|---|
| E60-E425 | ½-13 | 60 |
| ELP50-ELP100 | ¾-10 | 200 |

**⚠ WARNING**

Failing to properly torque bolts to the correct value may result in injury and premature fan drive failure.

### 4.6 TORQUE BOLTS

Torque all bolts to required values.

### 4.7 CHECK MOTOR ROTATION

**⚠ CAUTION**

If the fan drive is equipped with a non-reverse mechanism, ensure that the direction of rotation of the electric motor is correct before coupling to fan drive; otherwise, damage may occur upon startup.

Verify correct motor rotation before connecting drive shaft.

### 4.8 INSTALL DRIVE SHAFT

**⚠ DANGER**

Never approach or touch any rotating parts during operation or maintenance of the fan drive, doing so may result in severe injury or death.

Connect drive shaft in accordance with manufacturer instructions.

### 4.9 SERVICE PIPING

Installation of piping to the service openings will expedite routine maintenance and may be installed if desired. Service openings include oil fill and oil drain (Figure 1, Page 8). Use a suitable sealer for all pipe joints and coat all exposed threads to prevent corrosion.

### 4.10 ELECTRICAL CONNECTIONS

**⚠ DANGER**

Electrical shock hazard. Remove all power sources from all equipment before servicing; failing to do this will result is electrical shock causing injury or death.

### 4.11 BREATHER

The breather plug located on the top of the gear housing must be removed and piped to the outside of the stack, away from direct steam or moist air.

## 5. OPERATION

***ATTENTION:***

***No special break-in procedures are necessary.***

Each fan drive is factory tested, prior to shipping, to assure smooth and quiet operation. Excessive noise or vibration at initial operation is an indication of one or more of the following: (1) imbalance of the motor, coupling, or fan (2) improperly adjusted fan blades (3) torsional vibration (4) unstable mounting. If noise or vibration persists, discontinue operation and correct the problem before further operation. High vibration can be damaging to all components of the system.

### 5.1 REVERSING OPERATION

When reversing direction of rotation, allow the fan to come to a complete stop before restarting the motor. Reverse operation is permitted (without installed non-reverse option) for short periods at half speed (the reversing speed must be greater than 450 rpm). Contact the factory for recommendations prior to running the gear drive in reverse at full speed for extended time.

**⚠CAUTION**

If fan drive is equipped with an optional non-reverse (back-stop), reverse rotation will not be possible. Attempting to reverse rotation will cause fan drive damage. If you are unsure if the fan drive has the optional non-reverse feature, please contact Amarillo® Gear for further instructions.

Do not start the electric motor if the fan is wind-milling in the reverse direction or at an rpm higher than operating speeds in the forward direction; doing so will cause damage to fan drive.

### 5.2 NON-REVERSE (BACK-STOP) OPTION

If equipped with a non-reverse (back-stop) option, the non-reverse components are internal to the fan drive and shall not be operated in the reverse direction; doing so will result in major fan drive damage.

### 5.3 EXTREME COLD OPERATION

Fan drives operated in extreme cold ambient temperatures of below -20°F (-29°C) must be equipped with an oil sump heater and operated with synthetic oil. The fan drive's oil sump must be preheated to a minimum of 20° F (-7°C) before operation begins. Operation at temperatures between -21°F to 20°F will require an oil heater. In some instances, operation between 0°F to 20°F will be permitted without an oil heater, but synthetic oil is required.

## 6. MOTOR SELECTION

### 6.1 TWO SPEED

On installations with two speed motors, allow a suitable time delay before switching from high speed to low speed. The fan must be at, or below, the slow speed before energizing the slow speed winding.

### 6.2 VARIABLE SPEED

On installations with variable speed motors, do not operate gear drive below 400 rpm motor speed. For operation at motor speeds less than 400 rpm, fan drives will require a mechanical oil fan for proper lubrication. The addition of this option will allow operation with no minimum speed restrictions.

On most fan drive systems, it is common for one or more resonant speeds to exist between stop and motor nameplate maximum speed. Continued operation at a resonant speed will result in lateral or torsional vibrations which can be damaging to all components of the system. The most common indicator of torsional vibrations is an unusual rumbling or clattering noise from the gear drive at a specific speed. The noise will disappear when the speed is increased or decreased. This type of noise does not indicate a defect of the fan drive, but results when the vibratory torque exceeds the drive torque causing the gear teeth to separate and clash together very rapidly.

**⚠CAUTION**

On variable speed applications, operation within ±10% of a resonant speed should be avoided, and the transition through a resonant speed range should be swift.

## 7. SCHEDULED MAINTENANCE

Maintenance logs shall be kept that detail all maintenance work.

Fan drives require an accelerated oil change after the first

**⚠CAUTION**

The surface and shafts of the Amarillo® fan drive may become hot during operation; **injury due to burns may result if touched while maintenance is being performed.** Do not change the oil during operation; **this will result in damage to fan drive or injury.** Use caution when changing oil soon after shutdown of fan drive; **oil may be hot and splashing oil may cause injury due to burns.** Ensure all personnel are using the correct personal protective equipment as specified by local, state, and federal authorities. Change lubricant according to the maintenance manual; not following recommended procedure

### 7.1 DAILY

Visual inspections and observation for oil leaks, unusual noises and vibrations are recommended. If any of these occur, the fan drive should be shut down and the problem corrected.

### 7.2 WEEKLY

Check oil level using the oil level sight glass when fan drive is static (not rotating). Add oil to fan drive if necessary.

Check the fan drive for any oil leaks.

**⚠CAUTION**

A plugged breather/vent line may cause damage to gear drive if not corrected.

### 7.3 EVERY SIX MONTHS OR 2500 HOURS

***WHICHEVER COMES FIRST***

Check alignment of all components in the system.

Check all external fasteners for tightness.

Check all oil plugs and pipe fittings for leaks.

Change the fan drive lubricant

With the oil at operating temperature, completely drain the oil by removing the drain plug.

Inspect the lubricant for sludge, metal shavings, foreign material, and free water, or send a lubricant sample to a lab for analysis.

If the oil condition is acceptable, the fan drive may be refilled without flushing.

Refill the fan drive through the filler plug on the top cover, with a recommended mineral oil or synthetic oil listed in this publication (See Section 9, Page 7)

*Very humid environments, rapid changes in ambient temperature, and high operating oil temperature are some of the extreme operating conditions that lead to poor oil quality and formation of sludge inside the fan drive.*

**⚠CAUTION**

Poor oil quality after 6 months of operation indicates extreme operating conditions, and the change interval should be reduced to 2 or 3 months; failure to do so will cause premature failure.

### 7.4 EXTENDED OIL CHANGE INTERVALS

Sample every quarter.

How to take sample from port. It is difficult to take oil samples from double reduction fan drives.

Ensure sample is representative of the oil.

Sample should be taken shortly after shutdown while oil is still well mixed.

Sample should be drawn at least 2 inches from oil surface and 2 inches from any surface.

If sample is taken remotely, ensure stagnant oil is purged before collecting sample.

Limits of sample.

Water content < 400 ppm

TAN < 2.0

**⚠WARNING**

The surface and oil of the Amarillo® fan drive may become hot during operation; **Injury due to burns may result if touched while sampling is being performed.**

Never approach or touch any rotating parts during operation or maintenance of

**⚠CAUTION**

Ensure that all moving parts have stopped before attempting to service or inspect fan drive.

Dispose of lubricants in an appropriate manner in accordance with local, state, and federal regulations.

Viscosity ± 5% change from previous sample, ± 10% from original fill sample.

If above limits, change fan drive oil (See Section 9, Page 7).

## 8. INACTIVE FAN DRIVES

Special precautions are necessary during periods of inactivity in excess of one week. When the internal parts are not continually bathed by the lubricant as during opera-

# 9. LUBRICATION

Use only Rust and Oxidation Inhibited Gear Oils in accordance with AGMA (American Gear Manufacturers Association) 9005-F16 or more current standard. Use a lubricant ISO VG 320.

| AMBIENT TEMP AT GEAR DRIVE | 20°F TO 120°F (-7°C TO 49°C) |
|---|---|
| ISO VG CLASS | 320 |
| CASTROL | CASTROL ALPHA SP 320 |
| CHEVRON | CHEVRON MEROPA 320 |
| HP | PARTHAN EP 320 |
| MAK LUBRICANTS | BHARATH AMOCAM OIL 320 |
| MOBIL | MOBILGEAR SHC XMP320 |
| SERVO | SERVO MESH SP 320 |
| SHELL | SHELL OMALA F320 |
| SUNOCO | SUNEP 320 GEAR OIL |
| TOTAL | CARTER EP 320 |

## 9.1 MINERAL OILS

***LIST OF BRAND NAMES IS FOR PURPOSE OF IDENTIFYING TYPES & IS NOT TO BE CONSTRUED AS EXCLUSIVE RECOMMENDATIONS*

## 9.2 SYNTHETIC OILS/OIL HEATERS

Synthetic lubricants offer advantages of extended service life, a broader operational temperature range, reduced friction, and the ability to maintain a higher film strength which can extend the service life of the fan drive.

Synthetic lubricants can be made of various base stocks which are incompatible with certain fan drive components; therefore, any synthetic lubricant not listed in this bulletin should be approved by Amarillo® Gear Company. Change intervals for synthetic lubricants should not be extended beyond the change interval for mineral oil without a comprehensive oil quality monitoring program.

If the fan drive is started when the ambient temperature is below 20°F (-7°C), use a lube oil heater or a recommended synthetic oil. Optional lube oil heaters may be ordered on a new fan drive or retrofitted in the field.

Fan drives operated in extreme cold ambient temperatures of below -20°F (-29°C) must be equipped with an oil sump heater and operated with synthetic oil. The fan drive's oil sump must be preheated to a minimum of 20° F (-7°C) before operation begins.

If the operating oil temperature exceeds 180°F (82°C) for extended periods of time or the fan drive is started when

| AMBIENT TEMP AT GEAR DRIVE | 20°F TO 150°F (-29°C TO 66°C) |
|---|---|
| ISO GRADE | 320 |
| CHEVRON | MEROPA SYNTHETIC WM 320 |
| CASTROL | OPTIGEAR SYNTHETIC A 320 |
| MOBIL | MOBILGEAR SHC XMP320 |
| SERVO | SERVOSYNGEAR 320 |
| SHELL | SHELL OMALA OIL HD 320 |
| TOTAL | CARTER SH 320 |

the ambient temperature is below 20°F (-7°C), a synthetic oil is recommended.

***LIST OF BRAND NAMES IS FOR PURPOSE OF IDENTIFYING TYPES & IS NOT TO BE CONSTRUED AS EXCLUSIVE RECOMMENDATIONS*

### OIL CAPACITY

By following the above procedures, each Amarillo®

| MODEL | GALLONS | LITERS |
|---|---|---|
| GT1712 | 14 | 53 |

Generation II® Double Reduction Fan Drives will provide years of useful service. In the event repairs are necessary, contact service representative for available parts. Prompt factory re-build service is also available.

# 10. WARRANTY

To view Amarillo's complete warranty terms, please visit www.amarillogear.com

Each Amarillo Gear fan drive is the result of careful design and manufacturing technique. As with any precision machine component, proper selection, installation, maintenance, and operating procedures are imperative for long-life and trouble-free service. Our engineers will be pleased to assist when unusual conditions require special procedures.

# 11. EXTERNAL PART LOCATIONS

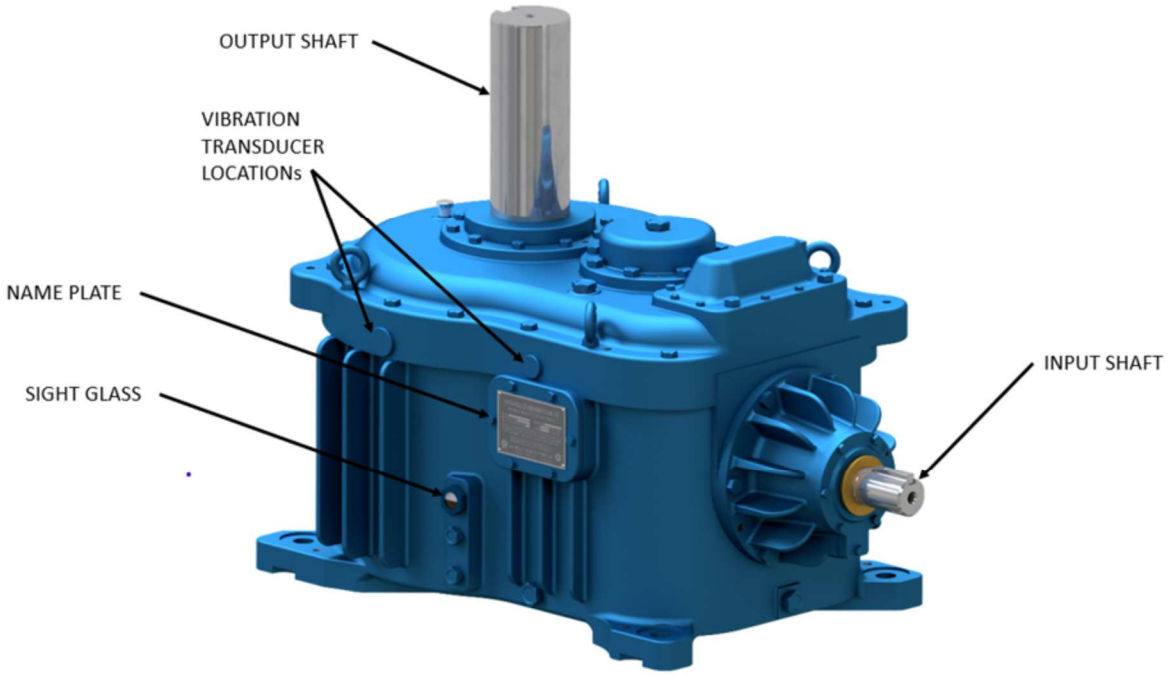


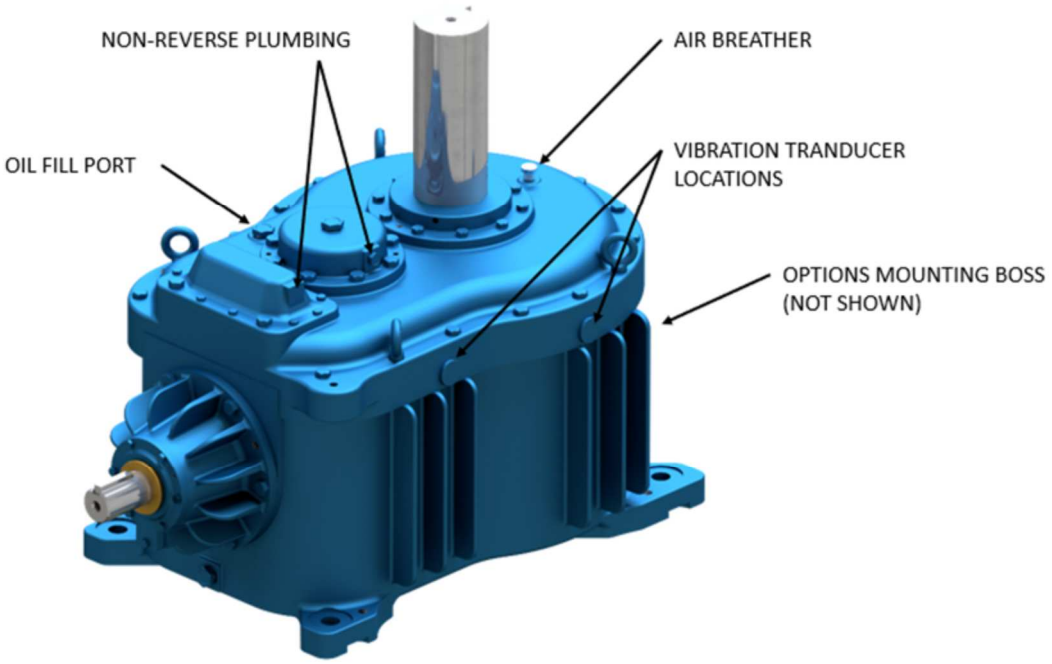

# 12. PARTS LIST

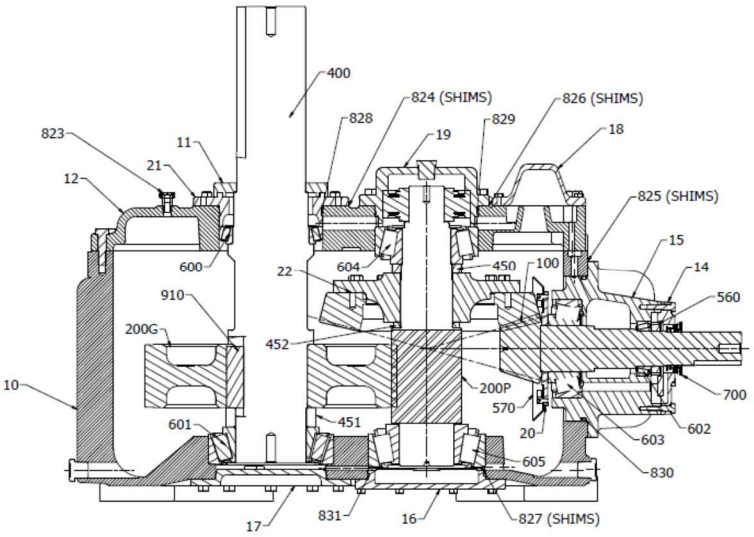


| REF NO. | PART NAME | PART NUMBER | | | REF NO. | PART NAME | PART NUMBER | | |
|---|---|---|---|---|---|---|---|---|---|
| | | GT1110 | GT1311 | GT1712 | | | GT1110 | GT1311 | GT1712 |
| 10 | GEAR CASE | O210 | O310 | O410 | 570 | OIL SLINGER | 570—GT1110 | 570—GT1311 | 570—GT1712 |
| 11 | UPPER OUTPUT COVER | O211 | O311 | O411 | 600 | UPPER BRG (OUT) | 600—GT1110 | 600—GT1311 | 600—GT1712 |
| 12 | COVER | O212 | O312 | O412 | 601 | LOWER BRG (OUT) | 601—GT1110 | 601—GT1311 | 601—GT1712 |
| 14 | ISOLATOR PLATE | O214 | O314 | O414 | 602 | OUTER BRG (HORZ) | 602—GT1110 | 602—GT1311 | 602—GT1712 |
| 15 | HORIZONTAL CARRIER | O215 | O315 | O415 | 603 | INNER BRG (HORZ) | 603—GT1110 | 603—GT1311 | 603—GT1712 |
| 16 | LOWER INT. COVER | O216 | O316 | O416 | 604 | UPPER BRG (INT) | 604—GT1110 | 604—GT1311 | 604—GT1712 |
| 17 | LOWER OUT COVER | O217 | O317 | O417 | 605 | LOWER BRG (INT) | 605—GT1110 | 605—GT1311 | 605—GT1712 |
| 18 | OIL SLINGER COVER PLATE | O218 | O318 | O418 | 700 | BEARING ISOLATOR | | | 24370 |
| 19 | UPPER INT COVER PLATE | O219 | O319 | O419 | 823 | BREATHER PLUG | 823 | 823 | 823 |
| 20 | OIL SLINGER MOUNTING PLATE | O220 | O320 | O420 | 824 | BRG SHIMS (UPPER OUTPUT) | 824—GT1110 | 824—GT1311 | 824—GT1712 |
| 21 | OUT ISOLATOR CAP | O221 | O321 | O421 | 825 | BRG SHIMS (HORZ) | 825—GT1110 | 825—GT1311 | 825—GT1712 |
| 22 | GEAR MOUNT | GMV O222 | GMV O322 | GMV O422 | 826 | BRG SHIMS (UPPER INT) | 826—GT1110 | 826—GT1311 | 826—GT1712 |
| —- | INSPECTION PLATE | L18M | L18M | L18M | 827 | BRG SHIMS (LOWER INT) | 827—GT1110 | 827—GT1311 | 827—GT1712 |
| 100 | BEVEL GEAR SET | 100—GT1110 | 100—GT1311 | 100—GT1712 | 828 | O-RING | | | M AS263 |
| 200P | HELICAL PINION | 200P—GT1110 | 200P—GT1311 | 200P—GT1712 | 829 | O-RING | | | M AS263 |
| 200G | HELICAL GEAR | 200G—GT1110 | 200G—GT1311 | 200G—GT1712 | 830 | O-RING | | | M AS449 |
| 400 | OUTPUT SHAFT | | | 85014 | 831 | O-RING | | | M AS267 |
| 450 | ABOVE GEAR SPACER (INT) | 450—GT1110 | 450—GT1311 | 450—GT1712 | 910 | GEAR KEY (OUT) | 910—GT1110 | 910—GT1311 | 910—GT1712 |
| 451 | BELOW GEAR SPACER (OUT) | 451—GT1110 | 451—GT1311 | 451—GT1712 | 911 | GEAR KEY (INT) | 911—GT1110 | 911—GT1311 | 911—GT1712 |
| 452 | BELOW GEAR SPACER (INT) | 452—GT1110 | 452—GT1311 | 452—GT1712 | —- | OIL SIGHT GAUGE | P1022-6 | P1022-6 | P1022-6 |
| 560 | HORZ. LOCKNUT | 560—GT1110 | 560—GT1311 | 560—GT1712 | | | | | |