AMARILLO® GEAR COMPANY LLC
Postal Address: Box 1789, Amarillo, Texas 79105
Plant Location: 2401 Sundown Lane, Amarillo, Texas 79118
T: 806-622-1273 FAX: 806-622-3258
www.amarillogear.com e-mail:info@amarillogear.com

OPERATION AND MAINTENANCE INSTRUCTIONS FOR AMARILLO COOLING TOWER DRIVES

Each Amarillo Cooling Tower Drive is the result of careful design and manufacturing techniques. As with any precision machine component, proper installation, maintenance and operating procedures are imperative for long life and trouble free service. The following instructions are offered to cover most conditions. Our engineers will be pleased to assist when unusual conditions require special procedures.

INSTALLATION: Make sure that the gear drive is filled with the proper amount and type of lubricant. Normally, gear drives are shipped with the proper amount and type of lubricant installed. Install oil if drive is shipped without oil or add oil if spillage has occurred. The initial oil level should be to the middle of the oil level sight gauge and should be maintained so that the oil level is always visible in the sight gauge window when the unit is stationary, level, and the oil is at ambient temperature.

Remove rust preventive from shaft extension and clean thoroughly. Install coupling halves. Couplings should be machined for a clearance fit. Hammering or mechanically forcing the coupling on the shaft can damage the bearings or disturb the setting of the gears and is not permissible. Interference fits are permissible if the coupling half can be heated for installation and fitted without hammering or mechanically forcing on the gear drive shaft. Check runout of aligning surfaces on both coupling halves before installing connecting members. Clean any excess anti-sieze compound off of the shaft, especially near the oil seals.

Level gear drive. If shimming is required, take precautions to prevent distortion of the housing. Align driver with gear drive to obtain parallel and angular alignment. Recheck alignment after two weeks of operation.

On "Wet Tower" installation, the breather plug located on the top of the gear housing must be removed and piped to the outside of the stack, away from the direct stream of moist air. Installation of piping to the other service openings will expedite routine maintenance and can be installed if desired. Service openings include oil fill and oil drain. Use a suitable sealer for all pipe joints and coat all exposed threads to prevent corrosion. Check all external fasteners for tightness.

OPERATION: No special break-in procedures are necessary, except as noted under lubrication.

Each unit is subjected to a running test at the factory to assure smooth and quiet operation. Excessive noise or vibration at initial operation is an indication of one or a combination of the following: (1) Misalignment (2) Imbalance of fan or other rotating parts (3) Improperly adjusted fan blades (4) Torsional vibration (5) Unstable mounting. If noise or vibration persists, shut the unit down and correct the fault before further operation.

On installations with **two speed motors,** allow a suitable time delay before switching from high speed to low speed. The fan must be at, or below, the low speed before energizing the low speed winding.

When reversing direction of rotation, allow the fan to come to a complete stop before restarting the motor. Standard gear drives may be operated in reverse at half speed (the reversing speed must be greater than 450 rpm) continuously without damaging the gear drive. Contact the factory for recommendations prior to running the gear drive in **reverse at full speed** for extended time.

On installations with **variable speed motors,** do not operate standard gear drives below 450 RPM motor speed. For operation at motor speeds less than 450 RPM, single reduction fan drives require Amarillo Gear's exclusive "Low Speed" option, and double reduction fan drives require a mechanical oil pump for proper lubrication. The addition of these options allows operation with no minimum speed restrictions.

On most fan drive systems, it is common for one or more resonant speeds to exist between 0 and 1800 RPM. Continued operation at a resonant speed condition will result in torsional vibrations which can be damaging to all components of the system. The most common indicator of torsional vibration is an unusual rumbling or grinding noise from the gear drive at a sharply defined speed. The noise will disappear when the speed is increased or decreased. The noise is not indicative of a defect, but results when the vibratory torque exceeds the drive torque causing the gear teeth to separate and clash together very rapidly. On **variable speed** applications, operation within ±10% of a resonant speed should be avoided and the transition through a resonant speed range should be swift. Contact Amarillo Gear for more information on resonant speeds and torsional vibrations.

MAINTENANCE: Check oil level weekly with each unit stopped. Add oil if level is below oil level indicator.

Daily visual inspections and observation for oil leaks and unusual noises and vibrations are recommended. If any of these occurs, the unit should be shut down and the cause found and corrected.

Periodic checks should be made of the alignment of all components of the system. Also, all external fasteners should be checked for tightness.

Special precautions are necessary during periods of inactivity in excess of one week. When the internal parts are not continually bathed by the lubricant as during operation, the gear drive is particularly vulnerable to attacks by rust and corrosion. For best results, let the drive cool for approximately four hours after shutdown, start the fan and let run for approximately five minutes. This will coat the internal parts of the drive with cool oil. Thereafter, run the fan for five minutes once a week throughout the shutdown period to maintain the oil film on the internal parts of the gear drive.

If the drive is to be inactive for a prolonged period, it is recommended that the unit be completely filled with oil. This can be accomplished by filling through the air breather port. Cover the drive with a tarpaulin or other protective covering. Drain the excess oil before returning the gear drive to service.

By following the above procedures, each Amarillo Cooling Tower Drive will provide years of useful service. In the event repairs are necessary, most parts are stocked at the factory and normally can be shipped within twenty-four hours after receipt of an order. Prompt factory re-build service is also available.

©AGC 2015

DOUBLE REDUCTION

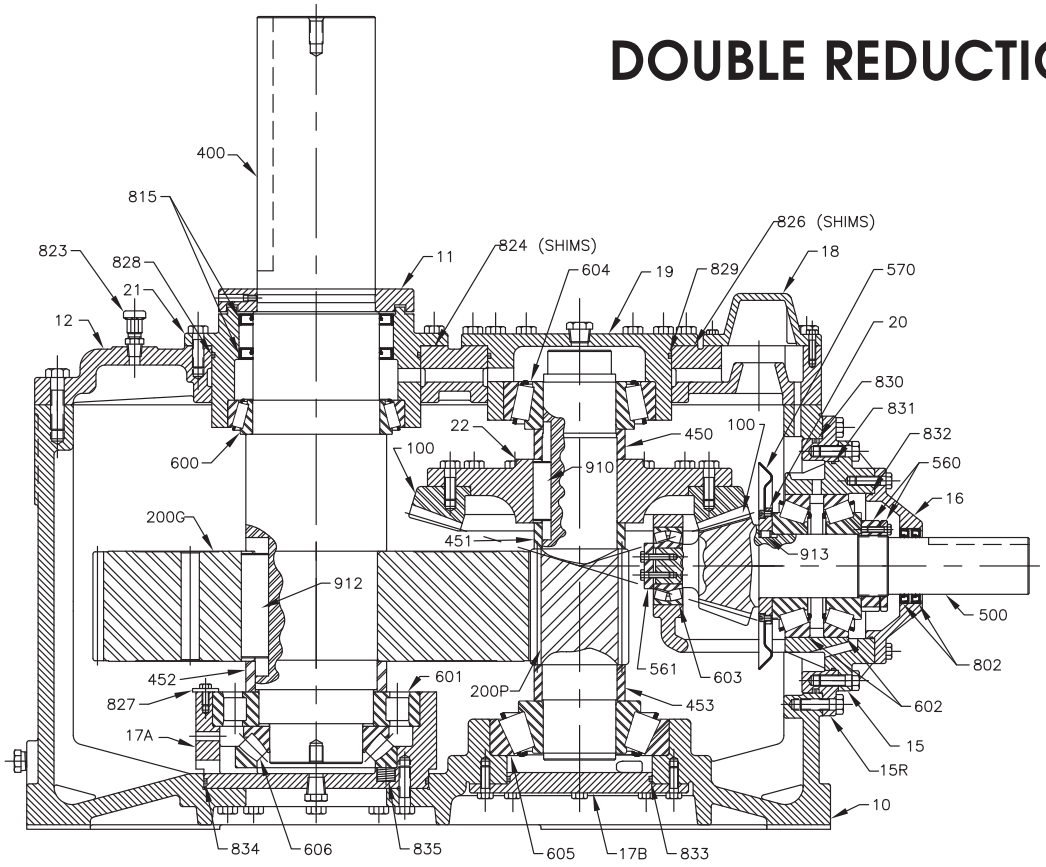

MODEL 1814

~ ATTENTION ~

Please note that gear drives with a serial number above 231989 have all joints sealed with Loctite Gasket Eliminator 515 instead of gaskets. Loctite 515 is a formed in place gasket material, which provides superior sealing over conventional gaskets. When necessary to disassemble for repair or inspection, we recommend resealing with Loctite 515. However, gaskets may still be used. If a gasket is utilized between the horizontal carrier and the gear case during a repair of a gear drive built with Loctite, then the oil slinger plate thickness will have to be changed to maintain the proper position of the horizontal gear. To correct the horizontal gear position, increase the oil slinger plate thickness by the thickness of the gasket. If Loctite is used to re-seal the gear drive then no changes are required.

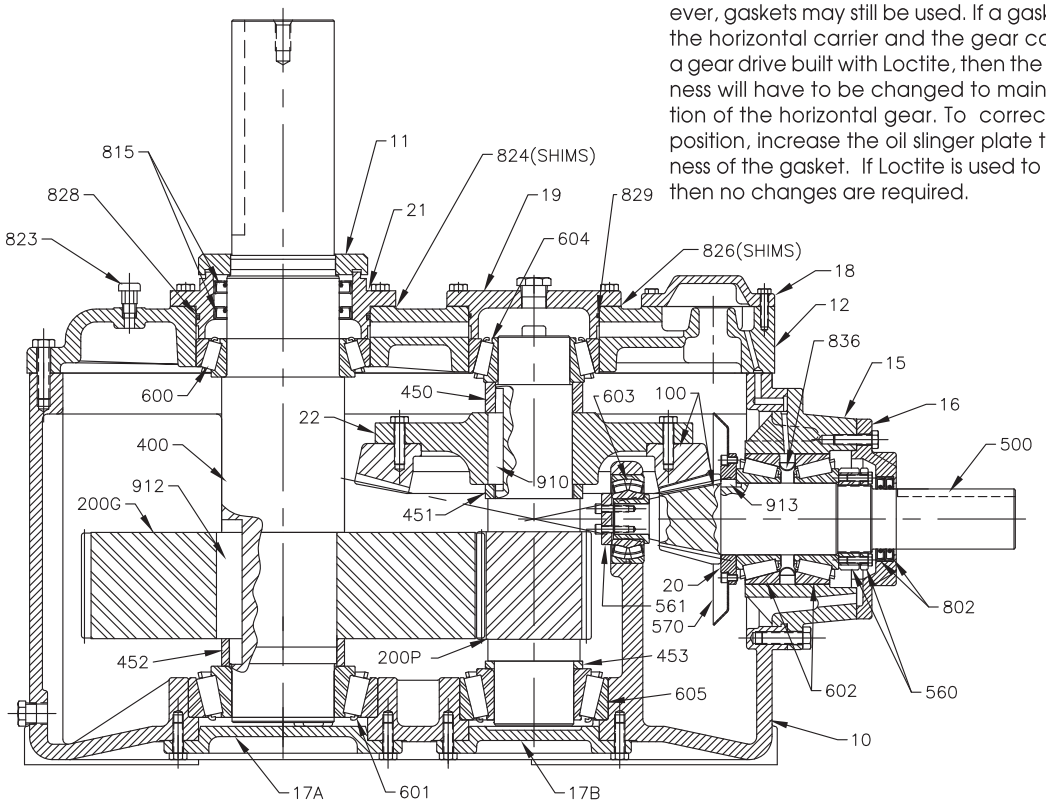

MODELS 1311, 1712, 1712.5, & 1713 A

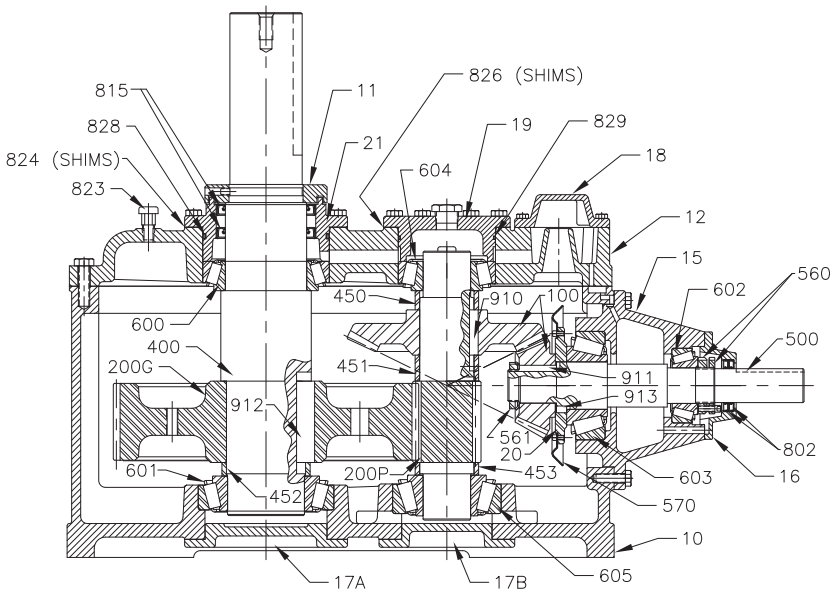

MODELS 1008 & 1110

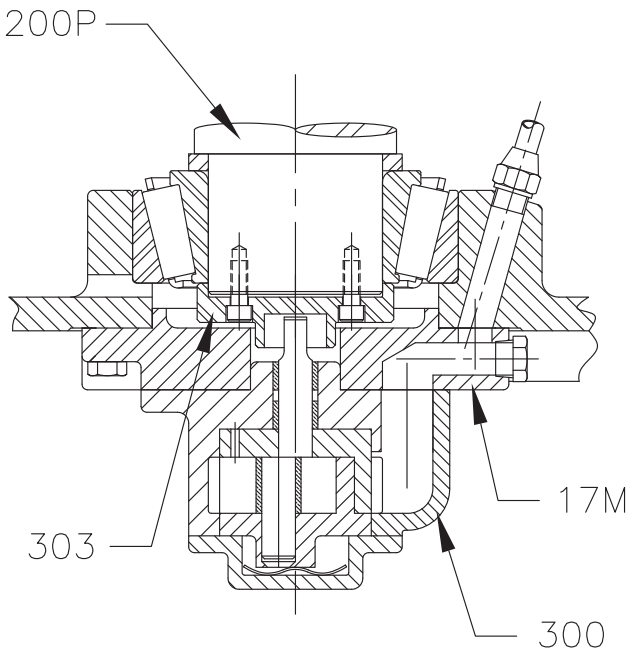

OPTIONAL OIL PUMP

1) Specify Serial Number when ordering repair parts.
2) Spiral Bevel Gear Sets are specified by Model Number and Ratio.
3) A Vertical Gear Mount (Ref. No. 22) is not used on all ratios. If a Vertical Gear Mount is required, then it should be purchased with the Helical Pinion (Ref. No. 200P) and the Vertical Gear Mount assembled on the Helical Pinion at the factory.
4) Not applicable to all ratios; consult factory.
5) Gear Case and Cover must be purchased as a unit.

*RECOMMENDED SPARE PARTS

REF. NO.	PART NAME
10	(5) Gear Case
11	Upper Seal Plate
12	(5) Cover
15	Horizontal Carrier (Outer)
15R	Horizontal Carrier
16	Horizontal Seal Plate
17A	Lower Brg. Cover (Output Shaft)
17B	Lower Brg. Cover (Interm. shaft)
17M	Lower Brg. Cover for Oil Pump
18	Oil Pocket Cover Plate
19	Upper Brg. Cover (Interm. Shaft)
20	Oil Slinger Plate
21	Vertical Seal Carrier
22	(3) Gear Mount
---	Inspection Plate
100	* Spiral Bevel Gear Set
200G	Helical Gear
200P	Helical Pinion
300	Oil Pump
303	Oil Pump Drive Plate
400	Output Shaft
450	Above Gear Spacer (Interm. Shaft)
451	Between Gear Spacer (Interm. Shaft)
452	Below Gear Spacer (Output Shaft)
453	Below Gear Spacer (Interm. Shaft)
500	(4) Horizontal Shaft
550	(4) Horz. Spacer – Inner
560	Horz. Locknut Set
561	(4) Horz. Gear Retainer
570	Oil Slinger
600	* Upper Brg. (Output Shaft)
601	* Lower Brg. (Output Shaft)
602	* Outer Brg. (Horz. Shaft)
603	* Inner Brg. (Horz. Shaft)
604	* Upper Brg. (Interm. Shaft)
605	* Lower Brg. (Interm. Shaft)
606	* Lower Thrust Brg. (Output)
802	* Horz. Seal Set
815	* Vertical Seal Set
823	Breather Plug
824	* Brg. Shims (Output Shaft)
825	Gasket Set (Not Shown)
826	* Brg. Shims (Interm. Shaft)
827	Retaining Washer
828	O–Ring
829	O–Ring
830	O–Ring
831	O–Ring
832	O–Ring
833	O–Ring
834	O–Ring
835	Pre–Load Springs
836	Horizontal Carrier Oil Ring
910	Gear Key (Interm. Shaft)
911	Gear Key (Horz. Shaft)
912	Gear Key (Output Shaft)
913	(4) Oil Slinger Key
---	Oil Sight Gauge

PART NUMBER						
MODEL 1008	MODEL 1110	MODEL 1311	MODEL 1712	MODEL 1712.5	MODEL 1713A	MODEL 1814
D1–10A	D2–10A	D3–10A	D4–10B	D4.5–10	D5–10B	D6–10
D1–11	D2–11	D3–11	D4–11	D4–11	D5–11	D6–11
D1–12A	D2–12A	D3–12	D4–12	D4–12	D5–12	D6–12
D1–15	D2–15	D3–15	D4–15	D5–15	D5–15	D6–15T
---	---	---	---	---	---	D6–15R
F4–16A	F4–16A	D3–16A	D3–16A	D5–16A	D5–16A	D6–16
D1–17AM	D2–17AM	D2–17AM	D4–17AM	D4-17AM	D5–17AM	D6–43
D1–17BM	D2–17BM	D3–17BM	D4–17BM	D4-17BM	D5–17BM	D6–17B
17M–1008	17M–1110	17M–1311	17M–1712	17M–1712.5	17M–1713	17M–1814
D1–18	D2–18	D2–18	D4–18	D4–18	D4–18	D6–18
D1–19	D2–19	D3–19	D4–19M	D4–19M	D5–19	D6–19
D1–20	D2–20A	33018	D4–20	D4–20	D4–20	D4–20
D1–21	D2–21	D3–21	D4–21	D4–21	D5–21	D6–21
---	---	D3–22	D4–22	D4–22	D4–22	D6–22
L18B	L18B	L18B	L18B	L18B	L18B	L18B
See Note #2	See Note #2	See Note #2	See Note #2	See Note #2	See Note #2	See Note #2
200G–1008	200G–1110	200G–1311	200G–1712	200G–1712.5	200G–1713	200G–1814
200P–1008	200P–1110	200P–1311	200P–1712	200P–1712.5	200P–1713	200P–1814
300–1008	300–1110	300–1311	300–1712	300–1712.5	300–1713	300–1814
303–1008	303–1110	303–1311	303–1712	303–1712.5	303–1713	303–1814
31028	32028	33028	34028	34203	35028	36028
450–1008	450–1110	450–1311	450–1712	450–1712.5	450–1713	450–1814
451–1008	451–1110	451–1311	451–1712	451–1712.5	451–1713	451–1814
452–1008	452–1110	452–1311	452–1712	452–1712.5	452–1713	452–1814
453–1008	453–1110	453–1311	453–1712	453–1712.5	453–1713	453–1814
500–1008	500–1110	500–1311	500–1712	500–1712.5	500–1713	500–1814
---	---	550–1311	550–1712	550–1712.5	550–1713	550–1814
3268	3268	5237	5237	6217	6217	6217
N/W–09	N/W–09	N/W–08	N/W–10	N/W –10	N/W–10	N 12148
31027	32025	32025	34022	34022	34022	36014
600–1008	600–1110	600–1311	600–1712	600–1712.5	600–1713	600–1814
601–1008	601–1110	601–1311	601–1712	601–1712.5	601–1713	601–1814
602–1008	602–1110	602–1311	602–1712	602–1712.5	602–1713	602–1814
603–1008	603–1110	603–1311	603–1712	603–1712.5	603–1713	603–1814
604–1008	604–1110	604–1311	604–1712	604–1712.5	604–1713	604–1814
605–1008	605–1110	605–1311	605–1712	605–1712.5	605–1713	605–1814
---	---	---	---	---	---	606–1814
802–1008	802–1110	802–1311	802–1712	802–1712.5	802–1713	802–1814
815–1008	815–1110	815–1311	815–1712	815–1712.5	815–1713	815–1814
823	823	823	823	823	823	823
824–1008	824–1110	824–1311	824–1712	824–1712.5	824–1713	824–1814
825–1008	825–1110	825–1311	825–1712	825–1712.5	825–1713	825–1814
826–1008	826–1110	826–1311	826–1712	826–1712.5	826–1713	826–1814
---	---	---	---	---	---	827–1814
M AS255	M AS363	M AS364	M AS369	M AS369	M AS268V	M AS379
M AS246	M AS251	M AS255	M AS258V	M AS258V	M AS362	M AS376
---	---	---	---	---	---	M AS456
---	---	---	---	---	---	M AS276
---	---	---	---	---	---	M AS170
---	---	---	---	---	---	M AS367
---	---	---	---	---	---	M AS381
---	---	---	---	---	---	PS 9–1204–21
---	---	34152	34152	35106	35106	---
910–1008	910–1110	910–1311	910–1712	910–1712.5	910–1713	910–1814
911–1008	911–1110	911–1311	911–1712	911–1712.5	911–1713	911–1814
912–1008	912–1110	912–1311	912–1712	912–1712.5	912–1713	912–1814
913–1008	913–1110	913–1311	913–1712	913–1712.5	913–1713	913–1814
P1030–4	P1022–6	P1022–6	P1022–6	P1022–6	P1022–6	P1022–6

SINGLE REDUCTION

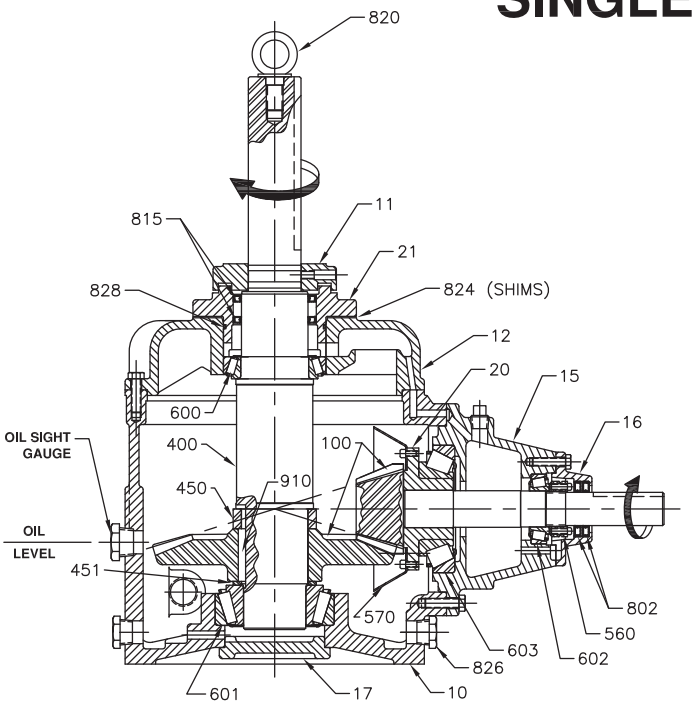

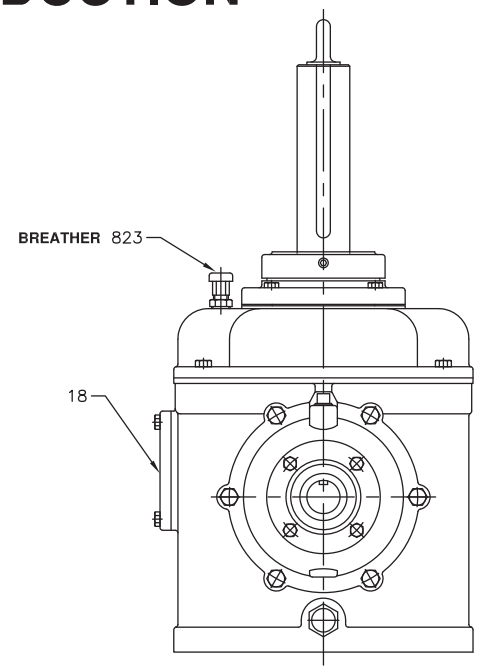

REF. NO.	PART NAME	PART NUMBER					
		MODEL 65A	MODEL 85	MODEL 110	MODEL 135	MODEL 155	MODEL 175
10	Gear Case	F1-10	F2-10	F3-10A	F4-10A	F6-10	F5-10
11	Upper Seal Plate	F1-11	F2-11	F3-11	F4-11	F5-11	F5-11
12	Vertical Carrier	F1-12	F2-12	F3-12	F4-12	F6-12	F5-12
15	Horizontal Carrier	F1-15A	F2-15	F3-15A	F4-15B	F5-15	F5-15
16	Horizontal Seal Plate	F1-16A	F2-16A	F3-16A	F4-16A	F6-16A	F6-16A
17	Bottom Plug	F2-17B	F2-17B	F4-17	F4-17	F5-17	F5-17
18	Inspection Plate	F1-18	S18	E18	E18	E18	E18
20	Bearing Bushing	——	F2-20	F3-20	F4-20	F5-20	F5-20
21	Vert. Seal Carrier	F1-21	F2-21	F4-21	F4-21	F6-21	F5-21
400	Vertical Shaft	21035	22009	23009	24009	26009	25009
422	(3) Gear Mount (Not Shown)	——	——	——	F4-22	F6-22	L22-3.75
450	Above Gear Spacer	450-65	450-85	450-110	450-135	450-155	450-175
451	Under Gear Spacer	451-65	451-85	451-110	451-135	451-155	451-175
560	Horiz. Locknut Set	2-N06/1-W06	1231	2230	3268	3268	3268
570	Oil Slinger	21010	22008	23008	24008	24008	24008
600	*Vertical Upper Bearing	600-65	600-85	600-110	600-135	600-155	600-175
601	*Vertical Lower Bearing	601-65	601-85	601-110	601-135	601-155	601-175
602	*Horiz. Outer Bearing	602-65	602-85	602-110	602-135	602-155	602-175
603	*Horiz. Inner Bearing	603-65	603-85	603-110	603-135	603-155	603-175
802	*Horizontal Seal Set	802-65	802-85	802-110	802-135	802-155	802-175
815	*Vert. Seal Set	815-65	815-85	815-110	815-135	815-155	815-175
820	Eye Bolt	820	820	820	820	820	820
823	Breather Plug	823	823	823	823	823	823
824	*Bearing Shim Set	824-65	824-85	824-110	824-135	824-155	824-175
825	Gasket Set (Not Shown)	825-65	825-85	825-110	825-135	825-155	825-175
826	Magnetic Drain Plug	826-65	826-85	826-110	826-135	826-155	826-175
828	O-Ring	——	M AS240	M AS245	M AS245	M AS253	M AS253
910	Gear Key	910-65	910-85	910-110	910-135	910-155	910-175
100	*Spiral Bevel Gear Set	See Note (2)	See Note (2)	See Note (2)	See Note (2)	See Note (2)	See Note (2)
——	Oil Sight Gauge	LSP 151 4B	P1030-4	P1030-4	P1030-4	P1030-4	P-1030-4
20	Oil Slinger Plate	F1-20A	——	——	——	——	——

1) Specify Serial Number when ordering repair parts.
2) Spiral Bevel Gear Sets are specified by Model Number and Ratio.
3) Vertical Gear Mounts are not used for all ratios. Gear Mount & corresponding Vertical Shaft should be ordered assembled as a set.

*RECOMMENDED SPARE PARTS

***RECOMMENDED MINERAL OILS**

AMBIENT TEMPERATURE AT GEAR DRIVE	20˚ F to 120˚ F (-7˚ C to 49˚ C)
AGMA LUBRICANT NUMBER	5
ISO Grade	220
Atlantic Richfield Co.	Duro 220
Chevron/Texaco	Rando HD 220, Regal R & O 220
Cities Service Oil Co.	Citigo Pacemaker 220
Conoco/Phillips 66/76	Multipurpose R & O Oil 220
Exxon Company	Teresstic 220
Gulf Oil Corp.	Harmony 220
Mobil Oil Corp.	DTE Oil BB
Pennzoil	Pennzbell TO 220
Shell Oil Co.	Morlina S3 BA 220
Sun Oil Co.	Sunvis 9220

*LIST OF BRAND NAMES IS FOR PURPOSE OF IDENTIFYING TYPES AND IS NOT TO BE CONSTRUED AS EXCLUSIVE RECOMMENDATIONS.

***RECOMMENDED SYNTHETIC LUBRICANTS**

AMBIENT TEMPERATURE AT GEAR DRIVE	-20˚ F to 150˚ F (-29˚ C to 66˚ C)
AGMA LUBRICANT NUMBER	5S
ISO GRADE	220
Chevron/Texaco.	Clarity 220 Synthetic
Conoco/Phillips 66/76	Syncon 220 – R & O Oil
Mobil	SHC 630 or SHC 630*
Shell	Morlina S4 B 220

LUBRICATION: Use only Rust and Oxidation Inhibited Gear Oils in accordance with AGMA (American Gear Manufacturers Association). Standard 9005-EO2 (or most recent edition of the standard). For general operating conditions, use a lubricant having an AGMA lubricant number of 5. Gear oils containing Extreme Pressure (EP) additives are not recommended, and should never be used on gear drives equipped with the nonreverse option.

If the gear drive is started when the ambient temperature is below 20º F (-7º C), use a lube oil heater or a recommended synthetic oil. Lube oil heaters and synthetic oil are extra cost accessories that can be ordered with new gear drives or installed in the field.

SYNTHETIC LUBRICANTS: Synthetic lubricants offer advantages of extended service life, a broader operational temperature range, reduced friction, and the ability to maintain a higher film strength which can extend the service life of the gear drive. When the operating temperature exceeds 180º F (82º C) or the gear drive is started when the ambient temperature is below 20º F (-7º C), a synthetic lubricant is recommended. Synthetic lubricants can be made of various base stocks which are incompatible with certain gear drive components; therefore, any synthetic lubricant not listed in this bulletin should be approved by Amarillo Gear Company. Do not use synthetic lubricants made from ester base stocks. Change intervals for synthetic lubricants should not be extended beyond the change interval for mineral oils without a comprehensive monitoring program.

CHANGE INTERVAL: The original oil should be replaced after 500 hours of operation or four weeks, whichever comes first. It is recommended that the oil be drained when it is at or near operating temperature. Refill the drive with the recommended type and amount of lubricant. The amounts below are recommendations and your specific gear box refill amount will vary depending on options and any residual oil left in the gear box. It is important that the gear box be filled to the center of the gear box sight glass for proper lubrication.

Normally the oil should be changed every 2500 hours or every six months, whichever comes first. Shorter change intervals of two or three months may be required if the gear drive is subjected to unusual operating conditions such as very moist atmosphere, rapid temperature changes, consistent high operating temperature or any conditions that tend to contaminate the oil or promote the formulation of sludge and deposits inside the gear case. If your cooling tower drive is equipped with an optional oil filter, the filter cartridge should be changed when the oil is replaced.

The vertical and horizontal shafts are equipped with grease lubricated dual seals. Relubrication is not required.

OIL CAPACITY

SINGLE REDUCTION DRIVES

MODEL	GALLONS	LITERS
65A	.5	2
85	1	4
110	2	8
135	3	11
155	5.5	21
175	5.5	21

DOUBLE REDUCTION DRIVES

MODEL	GALLONS	LITERS
1008	6	23
1110	8.5	32
1311	14	53
1712	21	80
1712.5	22	83
1713A	24	91
1814	31	117
2016	53	201