RIGHT ANGLE GEAR DRIVES

"A" SERIES DRIVES FOR COOLING TOWERS

Single Reduction

Double Reduction

Amarillo® Gear Company LLC T.M.

A Marmon Water/Berkshire Hathaway Company

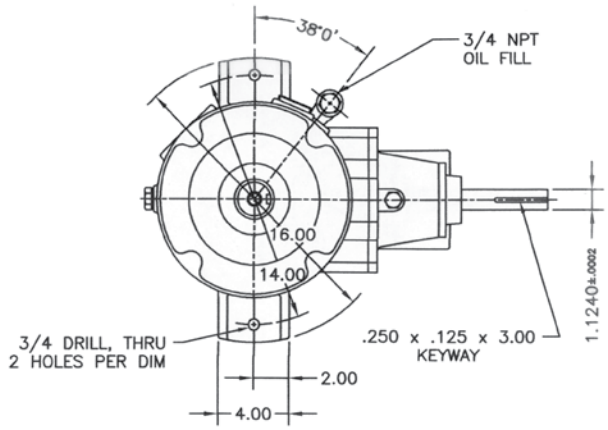

Model A20

Service HP Ratings based on 2.0 AGMA Service Factor

Input RPM	Gear Ratio	Fan RPM	Service HP Rating (2.0 Service Factor)
1750	2.71	646	35
1750	3.27	535	35
1750	3.78	463	30
1750	4.11	426	25
1750	4.89	358	20

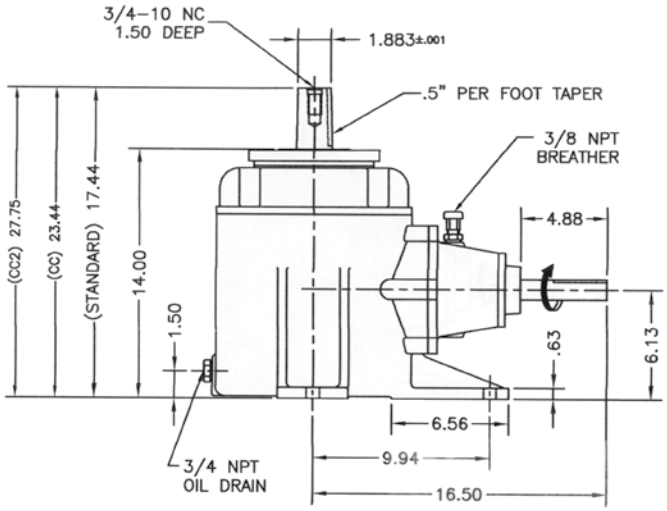

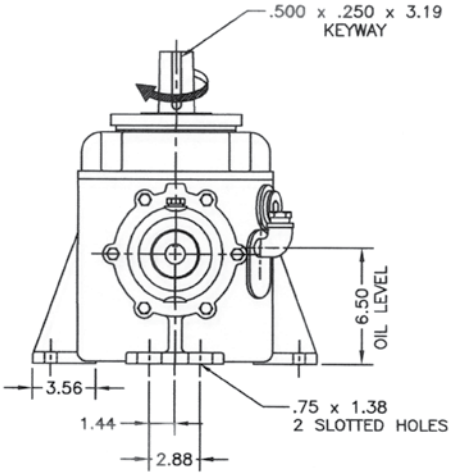

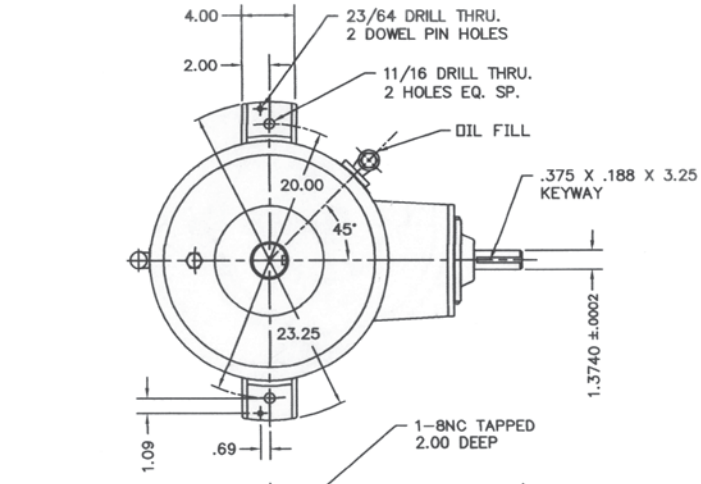

Model A22

Service HP Ratings based on 2.0 AGMA Service Factor

Input RPM	Gear Ratio	Fan RPM	Service HP Rating (2.0 Service Factor)
1750	3.45	507	70
1750	4.10	427	70
1750	4.56	389	70
1750	5.11	342	60
1750	5.50	318	60
1750	6.12	286	53
1750	6.50	267	53
1750	7.33	239	47

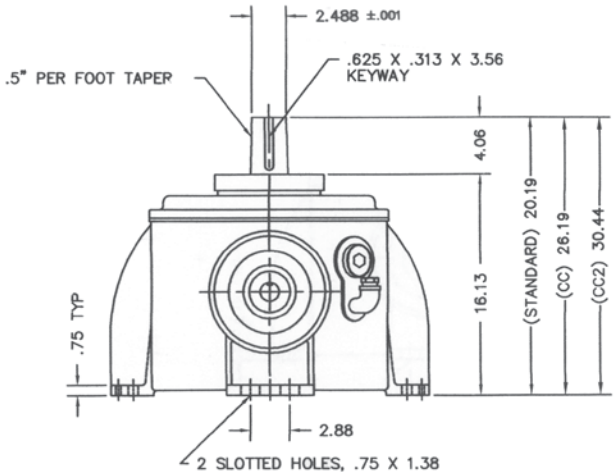

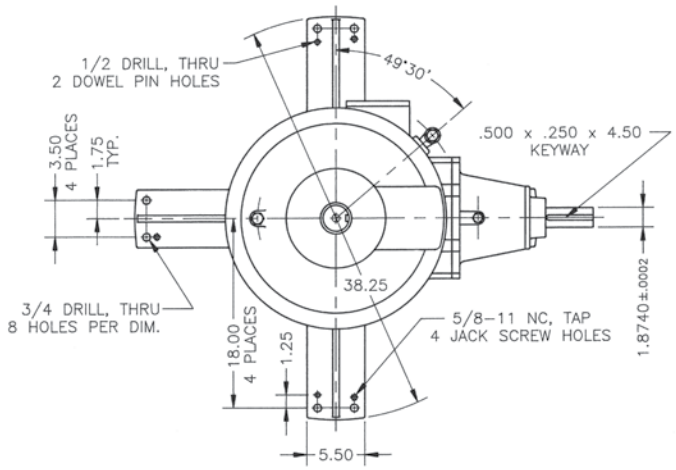

Model A27

Service HP Ratings based on 2.0 AGMA Service Factor

Input RPM	Gear Ratio	Fan RPM	Service HP Rating (2.0 Service Factor)
1750	5.77	303	80
1750	7.71	227	75
1750	8.66	202	60
1750	9.83	178	40

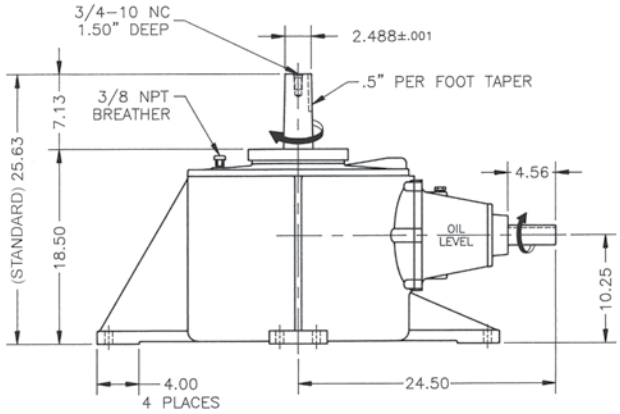

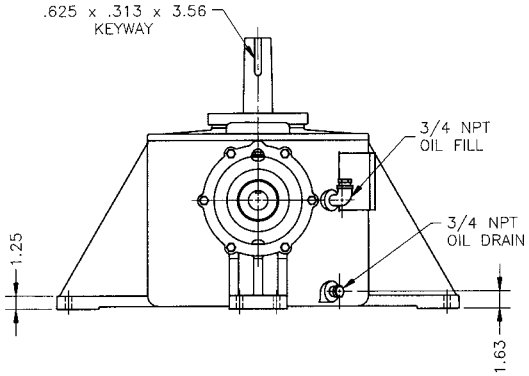

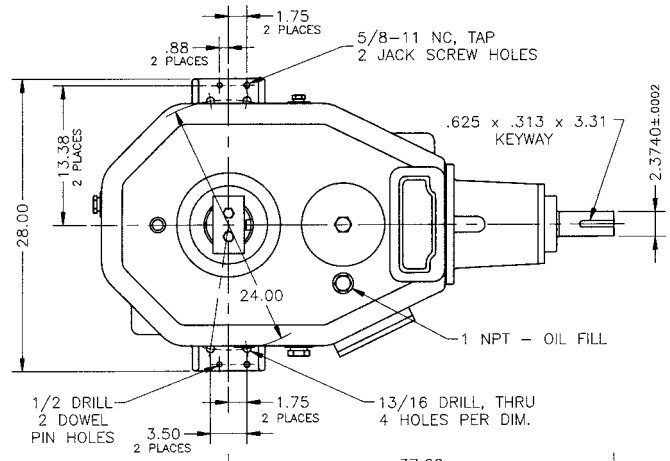

Model A32

Service HP Ratings based on 2.0 AGMA Service Factor

Input RPM	Gear Ratio	Fan RPM	Service HP Rating (2.0 Service Factor)
1750	6.47	270	160
1750	7.89	222	160
1750	8.80	199	160
1750	10.16	172	160
1750	11.18	157	160
1750	12.93	135	160

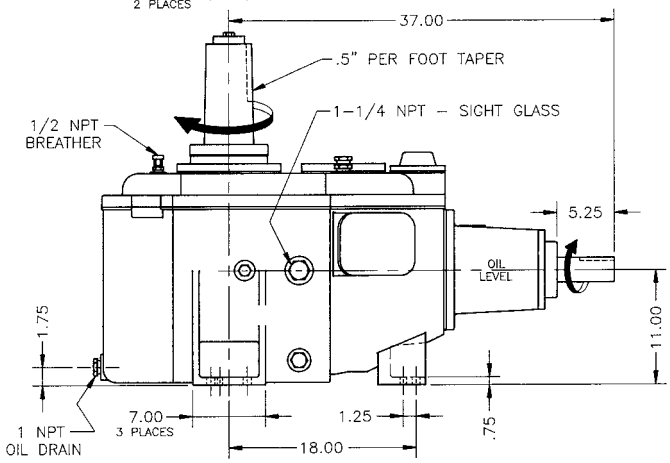

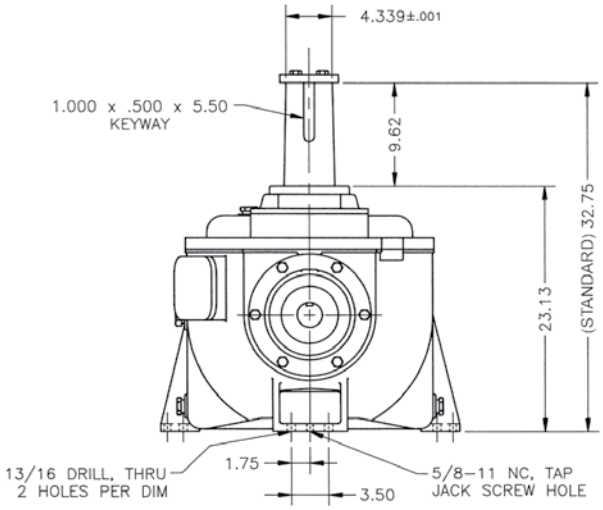

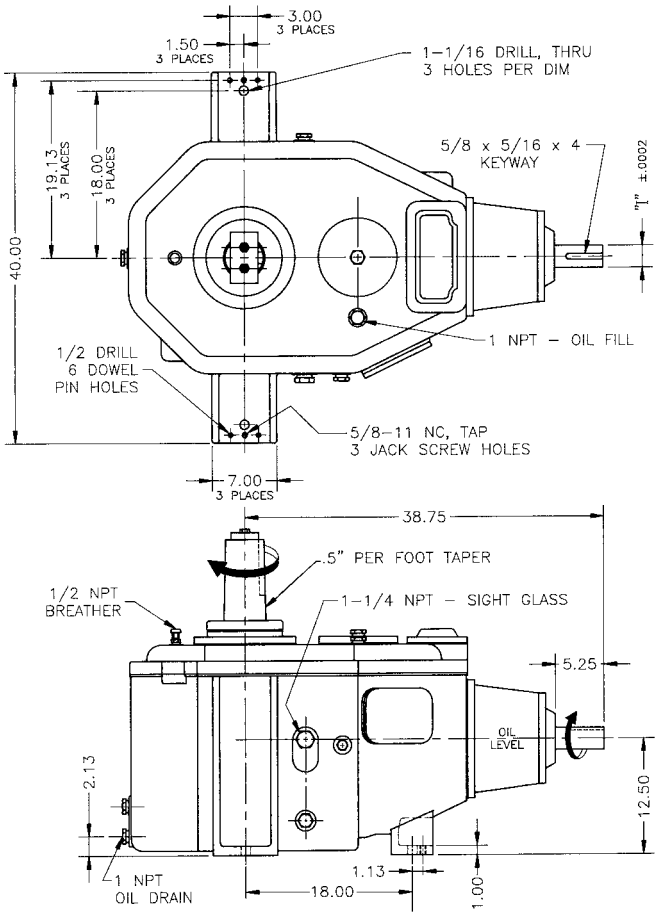

Model A34 — A36 — A38 — A40

Service HP Ratings based on 2.0 AGMA Service Factor

Model No.	Input RPM	Gear Ratio	Fan RPM	Service HP Rating (2.0 Service factor)
A34	1750	8.85	198	180
	1750	10.28	170	180
	1750	11.18	157	180
	1750	13.00	135	180
A36	1750	9.64	182	250
	1750	10.83	162	230
	1750	11.55	152	220
	1750	12.98	135	220
	1750	14.84	118	200
A38	1750	11.44	153	250
	1750	12.98	135	250
A40	1750	9.64	182	360
	1750	10.83	162	343
	1750	11.55	152	330
	1750	12.18	144	323
	1750	12.98	135	305
	1750	13.24	132	300
	1750	13.81	127	289
	1750	14.88	118	265
	1750	15.84	110	252
	1750	16.49	106	230

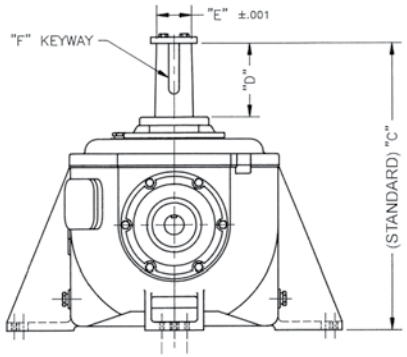

Model	"C"	"D"	"E"	"F" KEYWAY	"I"
A34	34.13	8.75	4.16	1 1/4 X 5/8 X 6	2.375
A36	33.94	7.88	6.227	1 1/2 X 3/4 X 7	2.625
A38	33.94	7.88	6.227	1 1/2 X 3/4 X 7	2.625
A40	40.88	14.81	6.227	1 1/2 X 3/4 X 7	2.625

Each Amarillo fan drive is the result of careful design and manufacturing technique. As with any precision machine component, proper selection, installation, maintenance and operating procedures are imperative for long life and trouble-free service. The following instructions are offered for selection of gear drives for usual applications. Our engineers will be pleased to assist when unusual conditions require special procedures.

Ratio

All ratios are reducing and defined as the ratio of input speed to output speed. Single and double reduction ratios shown are exact within ± 2%. Ratios shown in shaded portion of each table are normally available for expedited delivery. Check with the factory for availability and lead time of all model ratios not shaded.

Ratings

AGMA and CTI recommend a minimum service factor of 2.0 for gear drives in cooling tower fan service when driven by electric motors or steam turbines. All ratings are service ratings and include a 2.0 service factor. Ratings are listed for 1750 rpm motor speeds. Ratings for speeds less than 1750 rpm are proportional to the rating at 1750 rpm. Contact the factory for recommendations when the driver speed exceeds 1800 rpm.

Selection

The required ratio is established by dividing the input or driver speed by the output or fan speed. Select a model from the table that represents the closest desired reduction ratio with a service horsepower rating that meets or exceeds the full-load motor horsepower at 1750 rpm. The service horsepower rating are listed directly to the right of the gear ratio for each model. When gear drives are to be selected using a service factor other than the listed, multiply the service horsepower rating from the table by the listed service factor to get the mechanical rating. The mechanical rating is then divided by the required service factor to obtain the new service horsepower rating at the required service factor. Note that both AGMA and CTI recommend a minimum service factor of 2.0 for gear drives in cooling tower fan service.

To view Amarillo's complete warranty terms, please visit www.amarillogear.com.

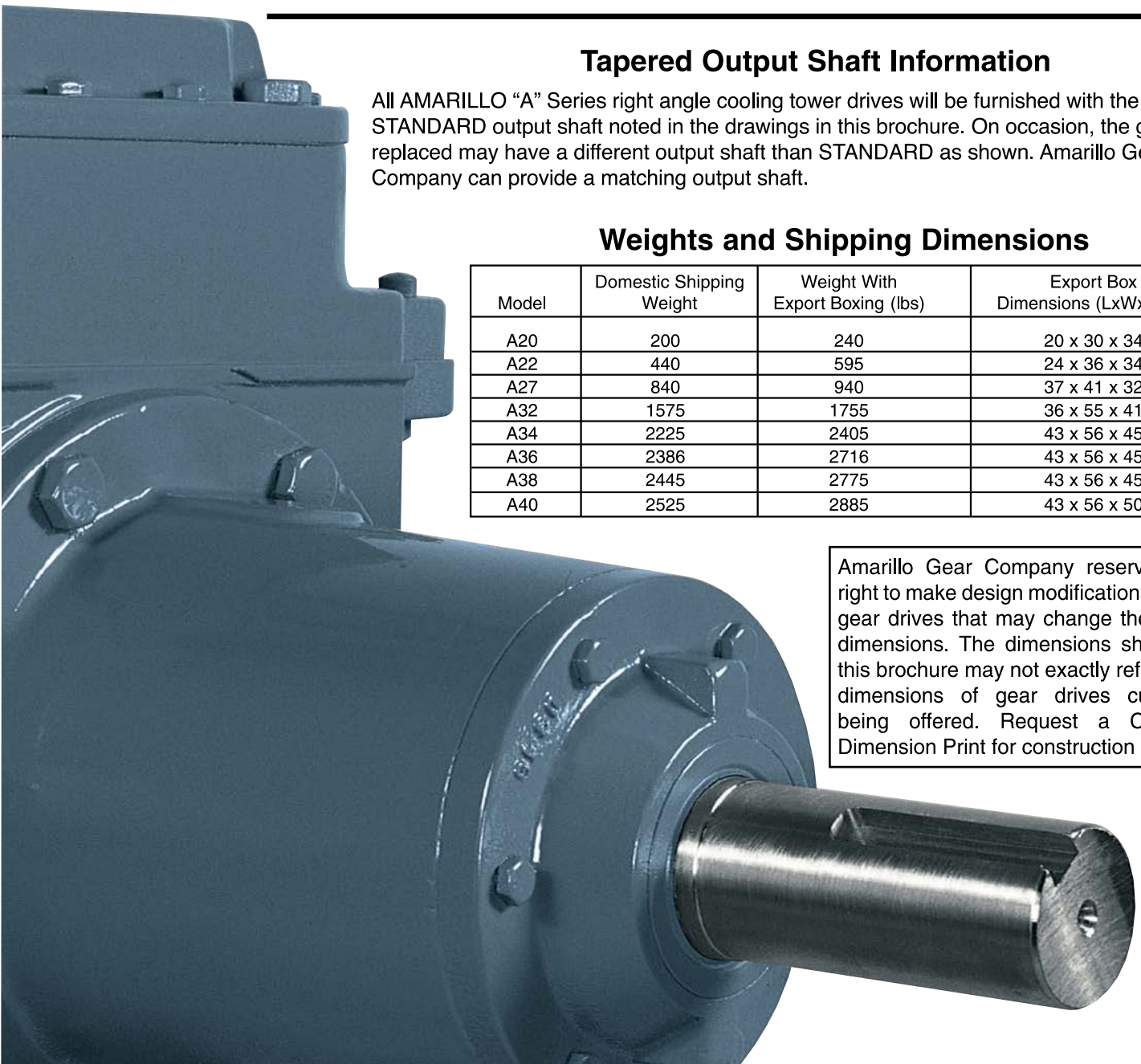

Tapered Output Shaft Information

All AMARILLO "A" Series right angle cooling tower drives will be furnished with the STANDARD output shaft noted in the drawings in this brochure. On occasion, the gear replaced may have a different output shaft than STANDARD as shown. Amarillo Gear Company can provide a matching output shaft.

Weights and Shipping Dimensions

Model	Domestic Shipping Weight	Weight With Export Boxing (lbs)	Export Box Dimensions (LxWxH)(in)
A20	200	240	20 x 30 x 34
A22	440	595	24 x 36 x 34
A27	840	940	37 x 41 x 32
A32	1575	1755	36 x 55 x 41
A34	2225	2405	43 x 56 x 45
A36	2386	2716	43 x 56 x 45
A38	2445	2775	43 x 56 x 45
A40	2525	2885	43 x 56 x 50

Amarillo Gear Company reserves the right to make design modifications to our gear drives that may change the given dimensions. The dimensions shown in this brochure may not exactly reflect the dimensions of gear drives currently being offered. Request a Certified Dimension Print for construction use.

“A” Series Right Angle Gear Drives

For Cooling Towers

The “A” Series right angle gear drives for cooling towers from AMARILLO GEAR are designed as direct replacements for the Marley® Cooling Tower line of right angle drives. Since there are no differences in the critical mounting dimensions, the “A” Series will make gear drive replacements easy. Gear housing foot patterns are identical, eliminating expensive tower gear drive support modifications. The input shaft diameters and keyways are the same, so existing couplings and drive shafts do not have to be replaced. All service ports are also easily accessible. Reduction ratios are within ± 2% of the Marley® reduction ratios, eliminating the need to make costly fan pitch adjustments.

And as always, each AMARILLO GEAR “A” Series is designed and manufactured to the exacting quality you have come to expect and rely on. AMARILLO GEAR has been designing and manufacturing spiral bevel right angle gear drives since 1934, and the commitment to excellence continues today. One of many examples of this commitment to excellence is the availability of complete noise and vibration testing performed at up to 500 horsepower loading. Design features and ratings are in accordance with, or exceed, the minimum requirements of AGMA (American Gear Manufacturers Association) and CTI (Cooling Technology Institute) standards.

Housing and Castings

Gear housing and castings are designed to ensure that critical dimensions correspond to those of the counterpart Marley® model. Castings are rigidly designed and constructed to absorb internal and external loads with minimum deflection. Gear case and cover are manufactured to assure permanent alignment of bearings and gears under load. The sloped floor of the gear case adds rigidity and permits complete oil drainage. All casting materials are gray cast iron for effective damping of noise and vibration. All mating castings are sealed using "formed-in-place" gasket material that eliminates "weeping" associated with fiber-type gaskets.

Spiral Bevel Gears

Designed and manufactured by AMARILLO GEAR for fan drive service, all spiral bevel gears are precision machined from high grade alloy steel, case hardened and lapped in pairs, allowing for quite and efficient operation.

Helical Gears

Helical gears are designed specifically for fan drive service and are precision machined from high grade alloy steel, case hardened and precision ground to provide low-noise, low vibration operation.

Bearings

Amarillo Gear is an industry leader with L_{10a} bearing life exceeding 100,000 hours on all bearings. Input and intermediate bearings provide double the service life specified in AGMA and CTI standards, resulting in lower maintenance costs. The fan shaft bearings are designed to carry all loads imposed by the fan while maintaining this outstanding bearing life. Only trusted name brand bearings such as Timken and SKF are installed in Amarillo fan drives.

Quiet Operation

Quiet operation of the Amarillo Fan Drives is achived through careful design and controlled manufacturing methods of components. Our engineers understand all of the many parameters that affect gear noise and have applied the latest research to the design and manufacture of all components. Parameters that reduce gear noise are controlled during design, manufacturing and assembly to guarantee quiet operation. Rigid shafts and permanently aligned housings guarantee alignments of gears under load are maintained. Test results collected in our state-of-the-art test facility proves thar our sound levels are the lowest available in the industry.

Shafting

All shafting is made from high alloy, fatigue resistant steel. Positioning of input and output shafts maintain the same dimensional locations as the corresponding Marley gear drive. Diameter and keyway of the input shaft remains unchanged. The output shaft is available in both the standard 1/2" per foot taper and special order dimensions. Note that the table entitled "Tapered Output Shaft Information" should be referenced to assure correct output dimensions before any order is placed. Surfaces for gears, bearings, and input coupling are precision machined.

Lubrication

Oversize slinger on the input shaft provides adequate lubrication in either direction or at half speed operation. Continuous circulation of oil to all bearings is assured by location of channels and baffles. A permanently mounted oil sight glass is provided on all double reduction units to provide direct visual determination of oil level.

A Series drives ship with the first fill of operating mineral oil installed. Synthetic oil is also available as an option. Synthetic lubricants offer advantages of extended service life, a broader operational temperature range, reduced friction, and the ability to maintain a higher film strength which can extend the service life of the gear drive.

Service Openings

Ports for oil fill, oil drain, inspection, and venting are easily accessible.

Shaft Seals

Both the input and output shaft openings have 2 spring-loaded, single-lipped type seals to keep outside contamination from entering the gearbox. Plus, the output shaft has a labyrinth-type plate directly mounted to the shaft to triple protect the gearbox from contamination that might try to enter due to the natural effect of gravitation.

Optional Features

Special output shaft dimensions, backstops (anti-windmilling), oil level switch, oil heaters and thermostats, oil temperature switches, spot-face/drill and tap for vibration transducers, "low speed" option for single reduction gearboxes when motor input speeds drop below 450 rpm and other accessory items are available on special order.

T.M.

Amarillo® Gear Company LLC

Post Office Box 1789 • Amarillo, Texas 79105 • 2401 Sundown Lane (79118) 806•622•1273 • FAX 806•622•3258
www.amarillogear.com e-mail: info@amarillogear.com

© AGC 2015